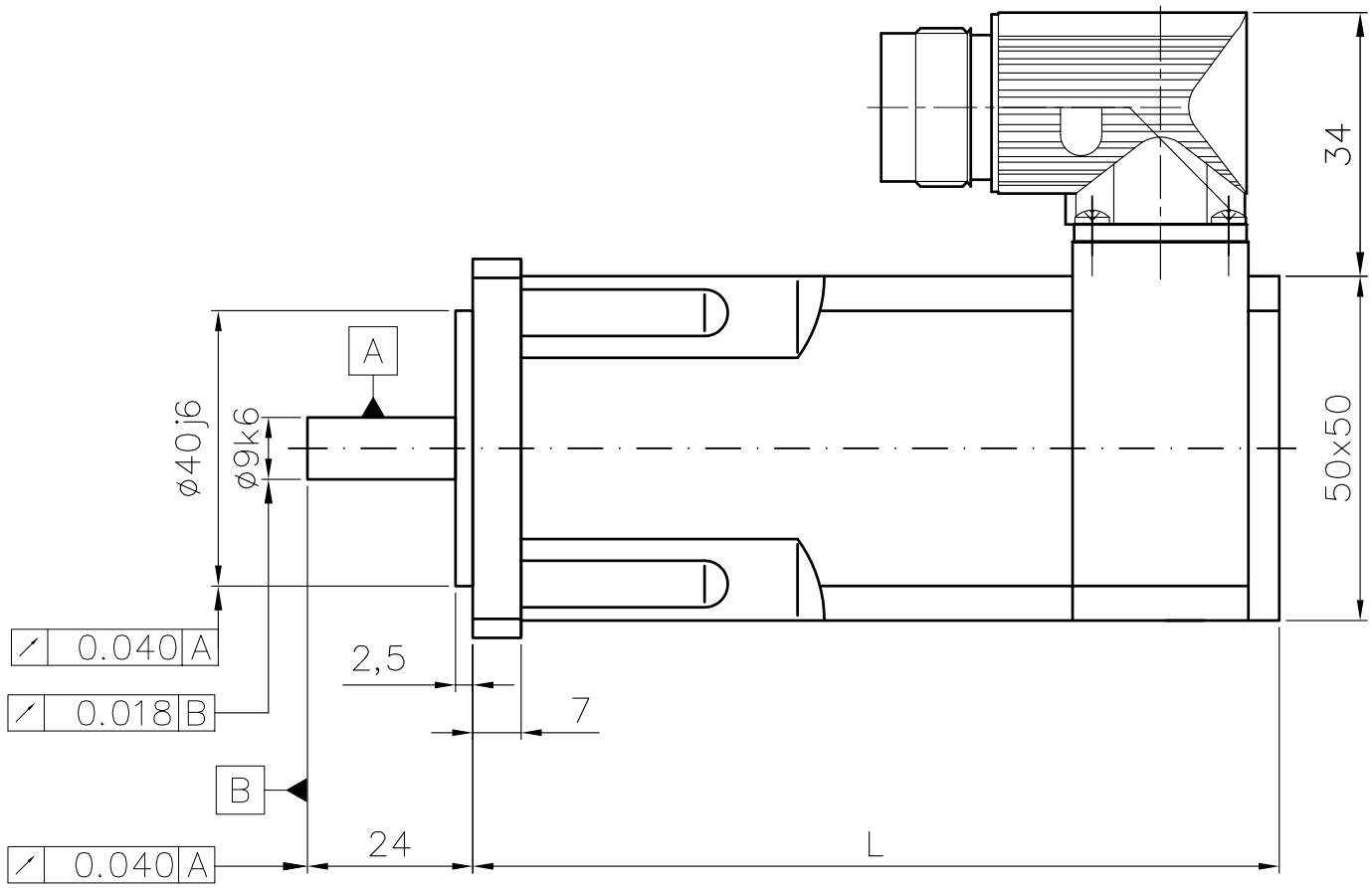

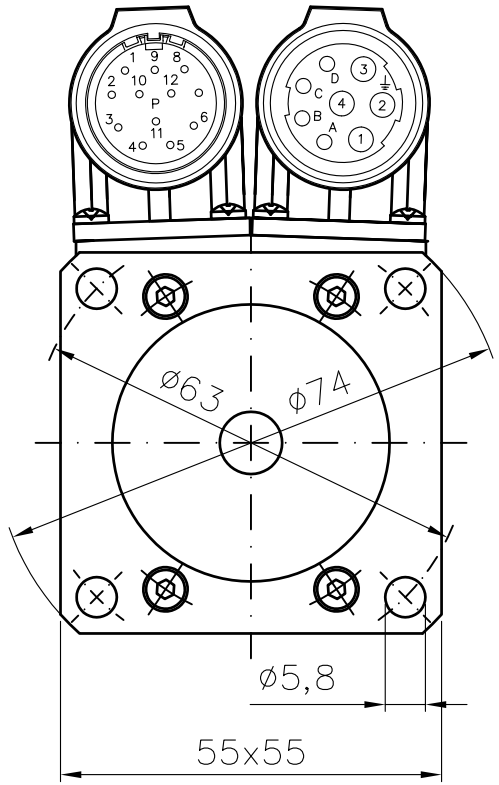

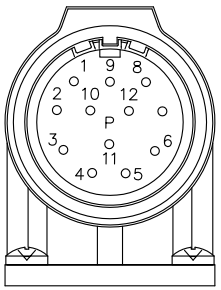

RESOLVER
4 S2 sin+
8 S4 sin−
3 S1 cos+
7 S3 cos−
5 R1+
9 R2−
2 THERMO
6 THERMO

12 pole, pinout "00" sensor variant, view from the pins side to the elbow connector
P/N: A EW D 052 MR83 00 0014 000

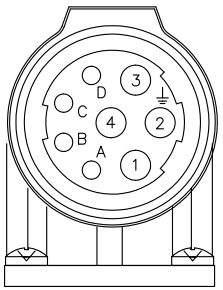

POWER
1 U
4 V
3 W
2 GND
C BRAKE+
D BRAKE−

elbow 8 pole connector
P/N: B EW D 089 MR13 00 0007 000
max. continuous current 20 Amps

PINOUT : 0000

MOTOR	L (no brake)	L (with brake)
ADT2−0020−L	107	140
ADT2−0040−L	122	155
ADT2−0060−L	137	170
ADT2−0080−L	152	185

servDrive Z.-Nr. 25014

ADT 2
general drawing

Die oben genannten Bemaßungen sind Richtwerte.
Alle Abmessungen in mm / All dimensions in mm

date : 24.01.2005
author : Peter Uher